CA-8 HEADER

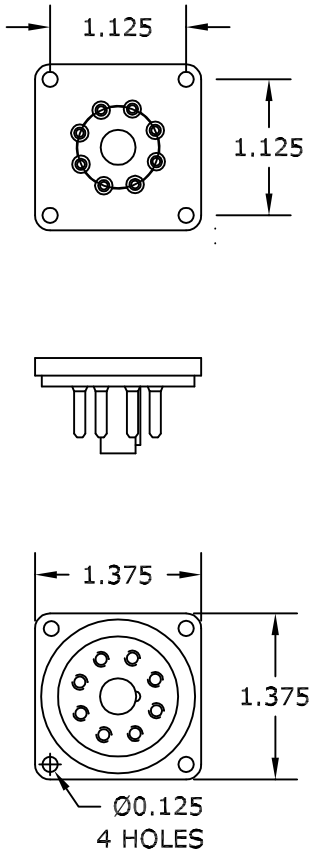

CA-8DT HEADER

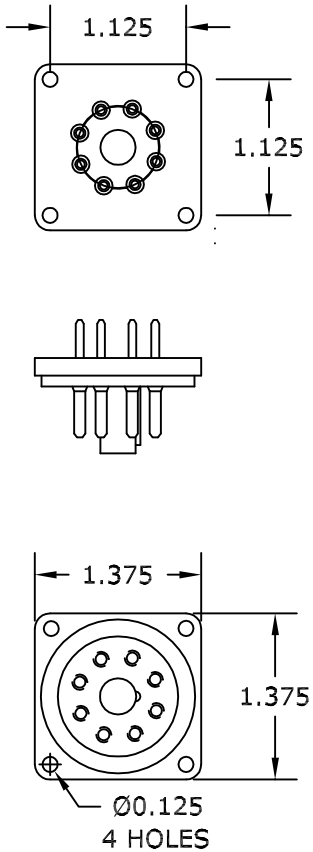

CA HOUSING

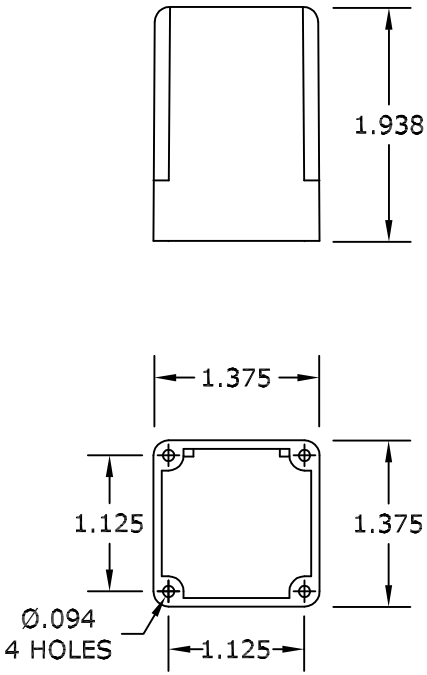

CAS HOUSING

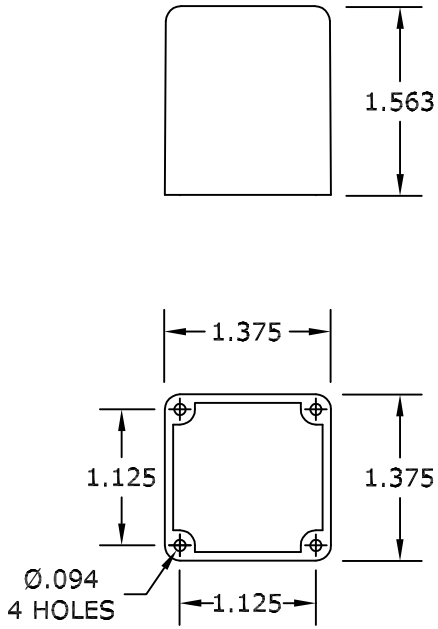

THESE HEADERS ALSO AVAILABLE IN AN 11 PIN CONFIGURATION.

REV	DATE	DESCRIPTION	BY	MODOR PLASTICS		
				CA SERIES ENCLOSURE LAYOUT		
				TOLERANCES UNLESS OTHERWISE SPECIFIED 2 PLACE DECIMALS (IN) ± .02 3 PLACE DECIMALS (IN) ± .005 4 PLACE DECIMALS (IN) ± .0005 ANGLES ± .5° METRIC (MM) ± .15	DESIGNER JRK SHEET 1OF1	DATE 11/14/00 SCALE
				MATERIAL		REV