CB-8 HEADER

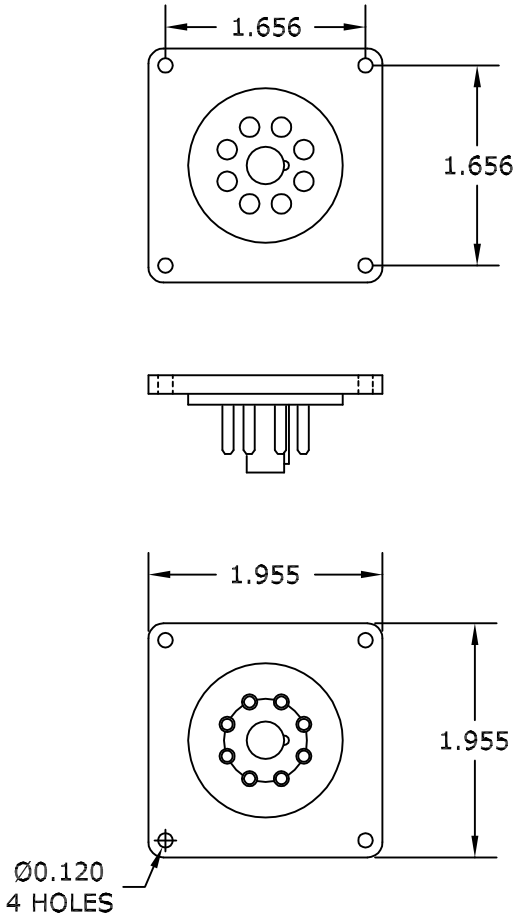

CB-8DT HEADER

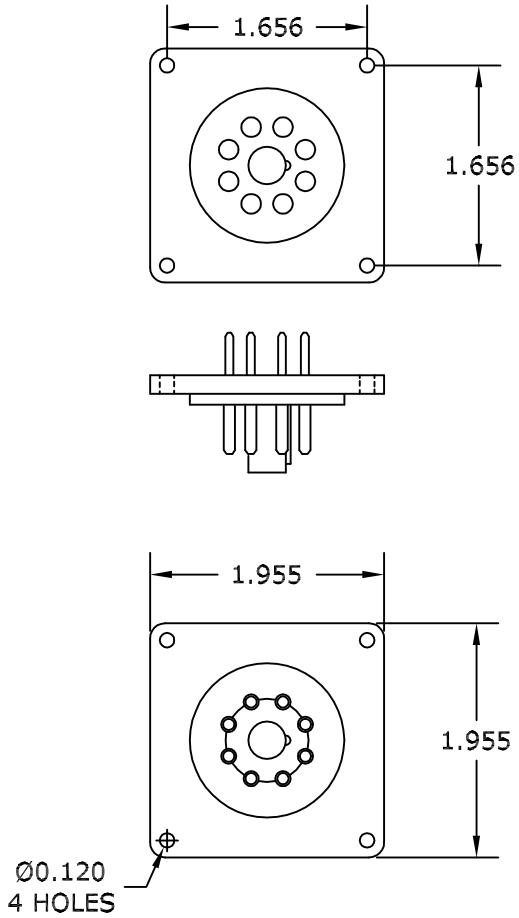

CB HOUSING

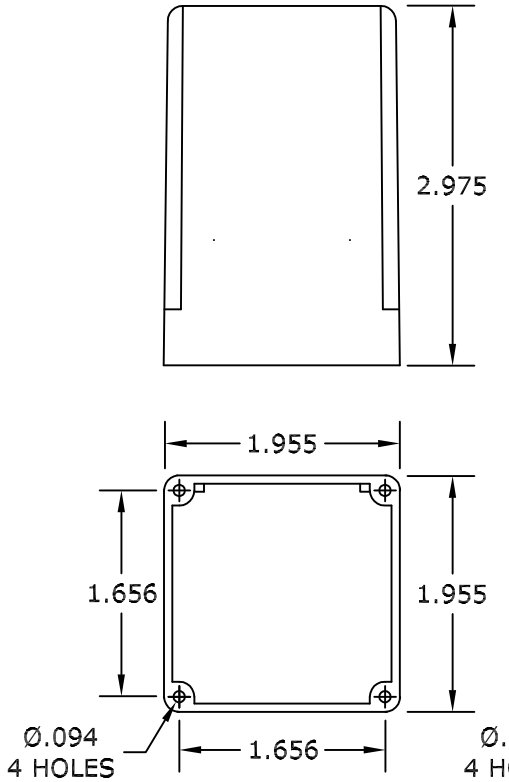

CBLP HOUSING

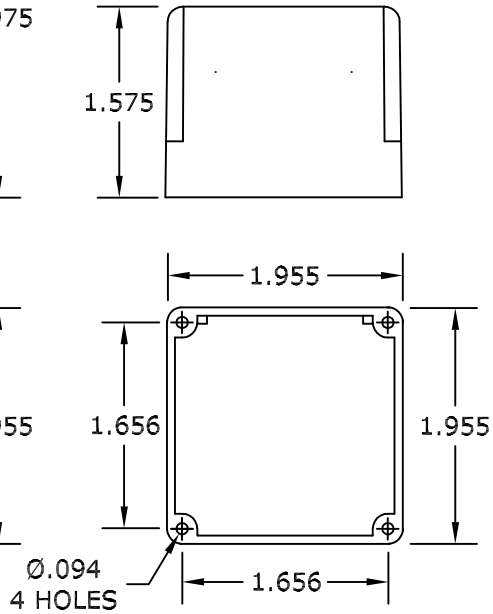

THESE HEADERS ALSO AVAILABLE IN AN 11 PIN CONFIGURATION.

REV	DATE	DESCRIPTION	BY	MODOR PLASTICS
				CB SERIES ENCLOSURE LAYOUT
				TOLERANCES UNLESS OTHERWISE SPECIFIED: 2 PLACE DECIMALS (IN) ± .02; 3 PLACE DECIMALS (IN) ± .005; 4 PLACE DECIMALS (IN) ± .0005; ANGLES ± .5°; METRIC (MM) ± .15 — DESIGNER JRK — DATE 11/14/00
				SHEET 1OF1 — SCALE
				MATERIAL — REV