CC-8 HEADER

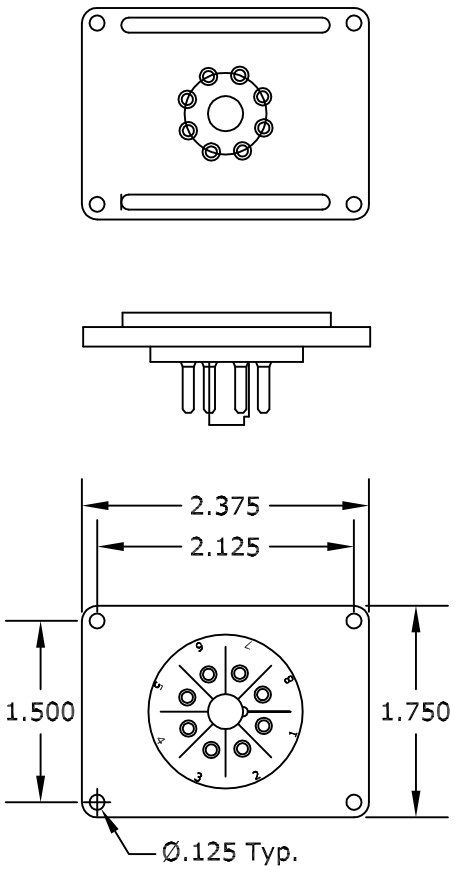

CC-8DT HEADER

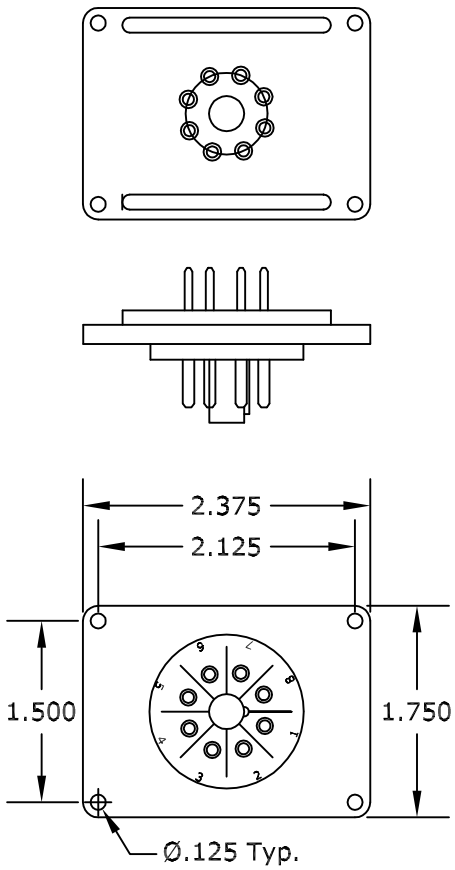

CCLPC HOUSING

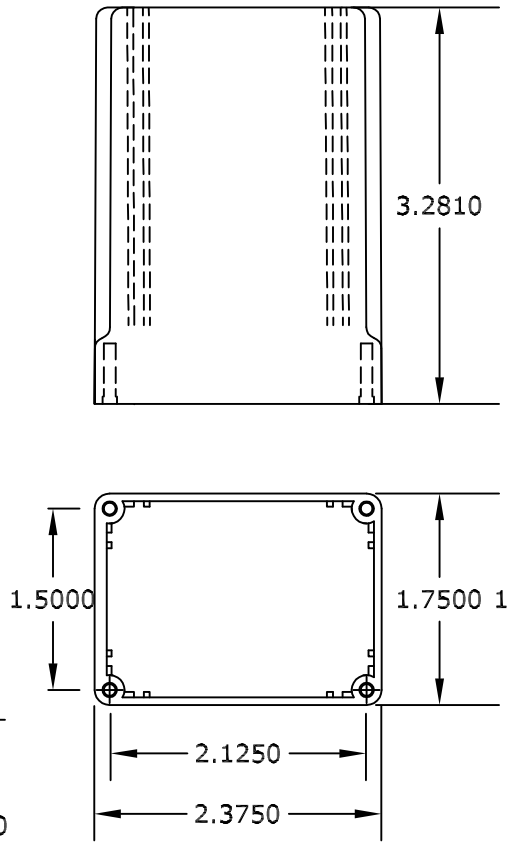

CC HOUSING

THE CC IS ALSO AVAILABLE WITH PCB SLOTS (CCPC)
AND THE CCLPC IS AVAILABLE WITHOUT PCB SLOTS (CCL)

THESE HEADERS ALSO AVAILABLE IN
AN 11 PIN CONFIGURATION.

REV	DATE	DESCRIPTION	BY	MODOR PLASTICS
				C SERIES ENCLOSURE LAYOUT
				TOLERANCES UNLESS OTHERWISE SPECIFIED: 2 PLACE DECIMALS (IN) ± .02; 3 PLACE DECIMALS (IN) ± .005; 4 PLACE DECIMALS (IN) ± .0005; ANGLES ± .5°; METRIC (MM) ± .15 — DESIGNER JRK — DATE 11/14/00 — SHEET 1OF1 — SCALE
				MATERIAL — REV